REV.	SPECIFICATION	ECN NO.	APPD.
R7		ECN250630	

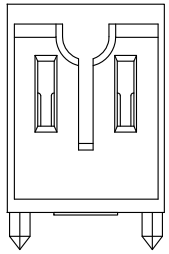

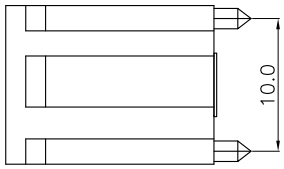

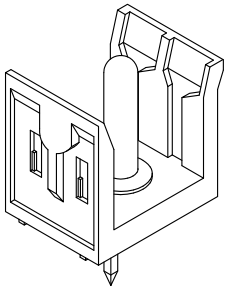

Material and planting:

Housing: LCP, UL94V-0 , Beige.

Contacts: Phosphor Bronze.

Gold Plated on Contact Area and Gold Flash on Solder Tail over nickel 50u" Min .

Electrical Characteristics:

Current Rating: 30 A.

Dielectric Withstanding Voltage: AC 1000V For 1 minute.

Insulator Resistance: 5000M Ωmin. at DC 500V.

Contact Resistance: 10mΩ max. at DC 100mA.

Operating Temperature: -65°C~+125°C.

RoHS Compliant.

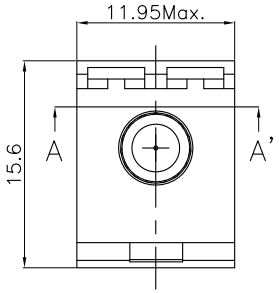

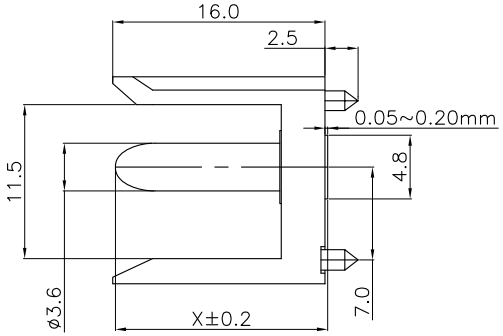

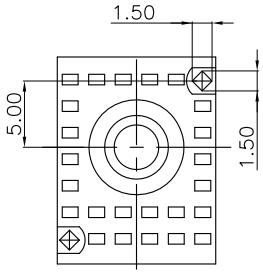

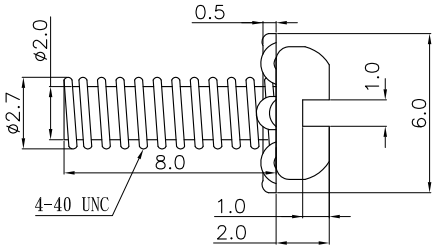

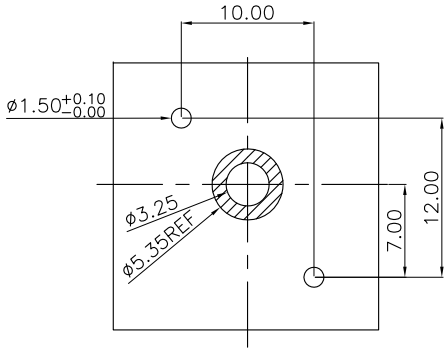

P.C. Board Layout
Tolerance±0.05

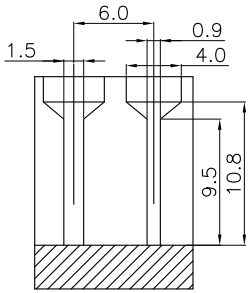

Section A-A'

9111- 14 3 B xxx G xx U

- Series
- 14: 4Rows Housing With One Pin
- 3: Male
- B: Power contact
- see product No
- G: Gold Plated
- 00:G/F 30: 30 u"
- U: Tube Package

Product No.	X
9111-143B001GxxU	14.5
9111-143B002GxxU	16.0

Tolerances	Dwg. No.	9111D14301	Title: 9111 Series H.D.2.0mm Male Power Connector	OUPIIN ELECTRONIC(KUNSHAN) CO., LTD.
x = ±0.5	Projection			P/N: 9111-143BxxxGxxU
.x = ±0.25	Unit mm	Scale 1:1		SHEET 1/1 Ver.No. R7
.xx = ±0.15	Drawn By	XM 06/12'25		