REV.	SPECIFICATION	ECN NO.	APPD.
R2		ECN250449	

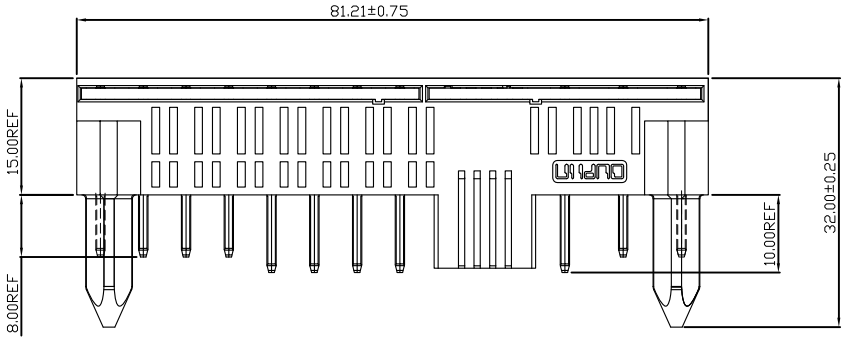

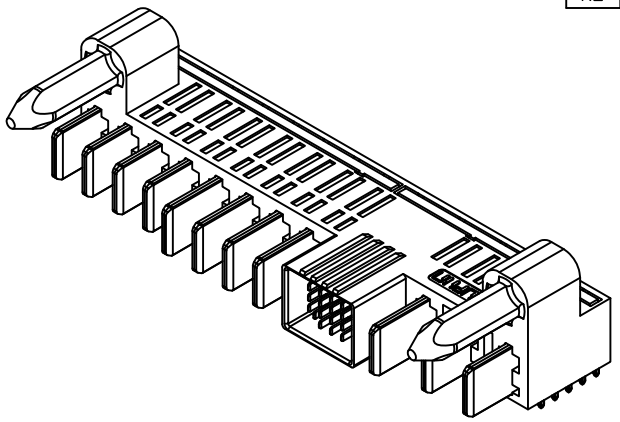

Material and Plating:

Housing: LCP,UL94V-0 , BLACK.
Power Contacts: High Conductivity Copper.
30u"Au+Pd/Ni on Contact Area and 80u" Min
Tin Plated on Solder Tail over nickel 50u" Min .
Signal Contact: Brass .
30u"Au+Pd/N on Contact Area and 80u" Min
Tin Plated on Solder Tail over nickel 50u" Min .

Electrical Characteristics:

Current Rating: Signal Pin 2.5 AMP.
Power Pin 60 AMP.
Dielectric Withstanding Voltage: DC 1500V For 1 minute.
Insulator Resistance: 5000MΩ min. at DC 500V.
Contact Resistance: Signal Pin 30mΩ max.
Power Pin 0.3mΩ max.
Operating Temperature: -40°C ~+125°C .

***RoHS Compliant**

Notes 1:

L: Low Power---PCB Mount 3.0mm Pitch
D: DC Power---PCB Mount 5.5mm Pitch
A: AC Power---PCB Mount 7.5mm Pitch

Notes 2:

A1: Signal Pin to The Top Distance is 2.92mm.
Other Signal: Signal Pin to The Top Distance is 1.92mm.

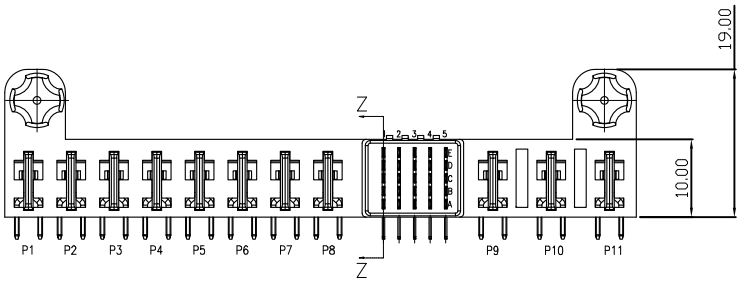

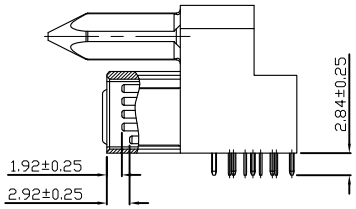

SECTION Z-Z

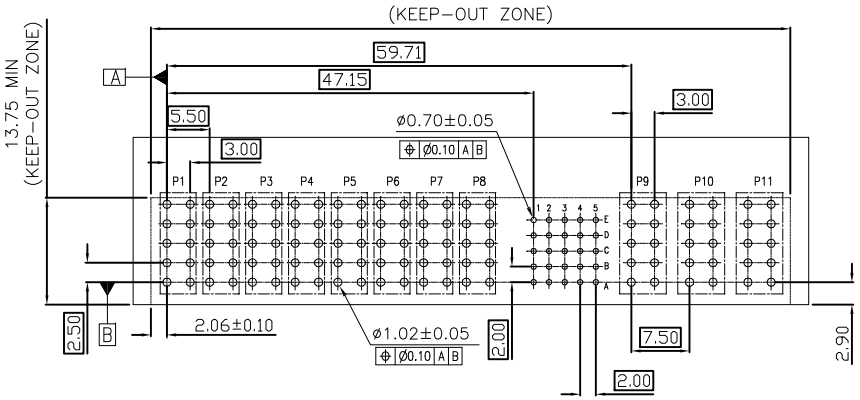

P.C.Board Layout
(Tolerance:±0.05)

9395- 1 D08 S25 A03 B 7 2 D N G1 A -A002

- Series: 9395-
- 1: Male Right Angle
- D08: Blank:Without Contact; Power Contact: Axx, Dxx , Lxx; No. of position
- S25: Blank:Without Contact; Signal Contact: S xx; No. of position
- A03: Blank:Without Contact; Power Contact: Axx, Dxx , Lxx; No. of position
- B: B: Dip Tin Plated; Contact Au+Pd/Ni Plated
- 7: 7: 30u"
- 2: 2: Without Rib
- D: D: Dip Type
- N: P: With Post; N: Without Post
- G1: G1: Guides Top
- A: A: Tray Package
- -A002: Internal Code

Tolerances	Dwg. No.	9395-D0000-007	Title: 9395 Series Max P60 10mm Low Profile, 60Amp Plug, Right Angle,FMLB	OUPIIN ELECTRONIC(KUNSHAN) CO., LTD.
x = ±0.5	Projection			P/N: 9395-1D08S25A03B71DNG1A-A002
.x = ±0.25	Unit mm	Scale 1:1		SHEET 1/1 Ver. No. R2
.xx = ±0.15	Drawn By	XM 04/21'25		