REV.	SPECIFICATION	ECN NO.	APPD.
X2			

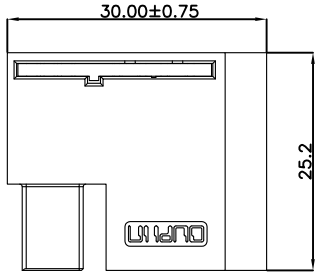

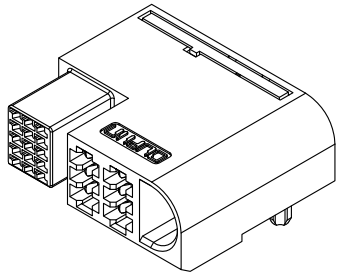

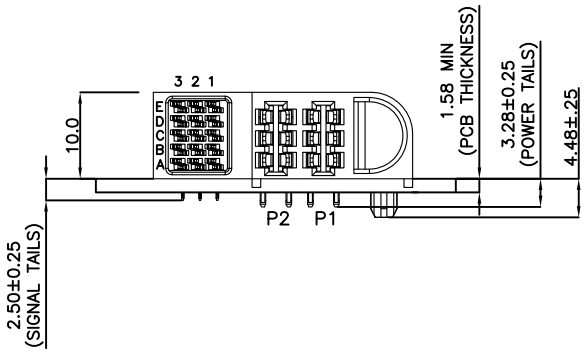

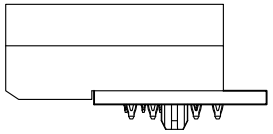

Material and Plating:

Housing: LCP, UL94V-0 , Black.
Molding: LCP, UL94V-0 , Black.
Stopper: LCP, UL94V-0 , Black.
Power Contacts: High Conductivity Copper .
Au+Pd/Ni or Gold Plated on Contact Area and 80u"
Tin Plated on Press Fit over Nickel 50u".
Signal Contacts : Phosphor Bronze.
Au+Pd/Ni or Gold Plated on Contact Area and 80u"
Tin Plated on Press Fit over Nickel 50u".

Electrical Characteristics:

Current Rating: Signal Pin 2.5 AMP.
Power Pin 60 AMP.
Dielectric Withstanding Voltage: Power Pin :DC 1500V For 1 minute.
Signal Pin :DC 500V For 1 minute.
Insulator Resistance: 5000MΩ min.
Contact Resistance: Signal Pin 30mΩ max.
Power Pin 0.3mΩ max.
Operating Temperature: -40°C ~+105°C .

***RoHS Compliant**

Notes 1:

L: Low Power---PCB Mount 3.0mm Pitch
D: DC Power---PCB Mount 5.5mm Pitch
A: AC Power---PCB Mount 7.5mm Pitch

Notes 2:

Left Side without guide and post.
Total Length is 30.0mm.

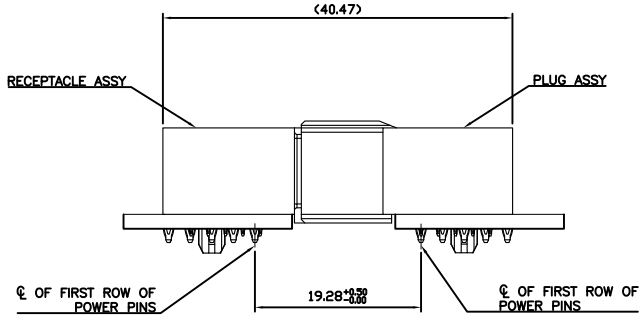

MATED PROFILE
(MATED WITH R/A RECEPTACLE ASSY)

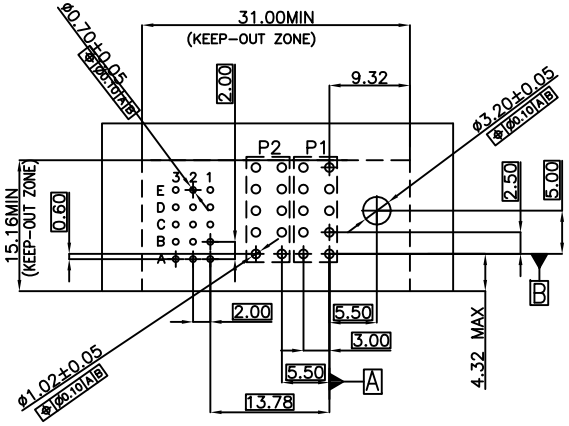

P.C.Board Layout
(Tolerance:±0.05)

9395- 4 S15 D02 B 7 2 P P G2 A -A022

- Series: 9395-
- 4: Female Right-angle
- Blank:Without Contact / Signal Contact: S xx (No. of position)
- Blank:Without Contact / Power Contact: Axx, Dxx , Lxx (No. of position)
- B: Dip Tin Plated / Contact Au+Pd/Ni Plated
- 7: 30u"
- 2 : Without Rib
- P: Press Fit Type
- P: With Post
- G2: Guides Side
- A: Tray Package
- -A022: Internal Code

PROPOSAL ONLY

Tolerances	Dwg. No.	9395-D0000-114	Title: 9395 Series Max P60 10mm Low Profile, 60Amp Receptable, Right Angle	OUPIIN ELECTRONIC(KUNSHAN) CO., LTD.
x = ±0.5	Projection			P/N: 9395-4S15D02B72PPG2A-A022
.x = ±0.25	Unit mm	Scale 1:1		SHEET 1/1 Ver. No. X2
.xx = ±0.15	Drawn By	WP 01/15'25		